http://doi.org/10.35784/iapgos.8220

received: 08.08.2025 | revised: 24.01.2026 | accepted: 03.07.2026 | available online: 30.09.2026

ENHANCING DIAGNOSTIC SYSTEMS FOR ANALYSING AND CONTROLLING OPERATING MODES IN ELECTRICAL DISTRIBUTION NETWORKS

Igor Khomenko[1], Ruslan Lozhkin[2], Andrii Shkrebela[3], Oleksandr Miroshnyk[4], Anatolii Sereda[4], Taras Shchur[5,6], Mariana Bohach[7]

[1]National Technical University "Kharkiv Polytechnic Institute", Department of Electrical Power Transmission, Kharkiv, Ukraine, [2]National Technical University "Kharkiv Polytechnic Institute", Department of Automation and Cybersecurity of Power Systems, Kharkiv, Ukraine, [3]National Technical University "Kharkiv Polytechnic Institute", Department of Electrical Power Transmission, Kharkiv, Ukraine, [4]State Biotechnological University, Department of Electricity Supply and Energy Management, Kharkiv, Ukraine, [5]State Biotechnological University, Department of Agricultural Engineering, Kharkiv, Ukraine, [6]University of Life Sciences in Lublin, Department of Agricultural, Forestry and Transport Machines, Lublin, Poland, [7]Stepan Gzhytskyi National University of Veterinary Medicine and Biotechnologies, Department of Higher Mathematics, Lviv, Ukraine

Abstract. *This article addresses the development, implementation, and quantitative verification of the Spectrum diagnostic system, designed for comprehensive monitoring and control of operating modes in electrical distribution networks. The research methodology integrates theoretical power-flow modelling with advanced experimental data acquisition. Theoretically, steady-state modes are calculated using an adapted Newton-based iterative procedure tailored for asymmetric and non-sinusoidal conditions, utilizing a phase-coordinate representation. The study introduces the microprocessor-based Energy Consumption Parameter Indicator (ECPI) experimentally. Recognizing the limitations of traditional electromagnetic transformers, the study justifies integrating optical current and voltage transformers to minimize inherent measurement errors. To benchmark the system's metrological capabilities, a comparative analysis was performed against the characteristics of a commercial Fluke 1734 power quality analyser. Furthermore, the practical applicability of the developed ECPI was assessed using measurements obtained under disturbed operating conditions. Quantitative results demonstrate that the adapted computational algorithm maintains a calculation error of no more than 5%, while laboratory testing of the complete measurement channel confirmed an intrinsic error of no more than 2.5%. These reported accuracy levels support the practical applicability of the proposed framework for operating-mode analysis, network configuration assessment, and power-flow management in modern distribution grids.*

Keywords: energy consumption parameter indicator, power quality

UDOSKONALANIE SYSTEMÓW DIAGNOSTYCZNYCH DO ANALIZY I STEROWANIA TRYBAMI PRACY W SIECIACH ELEKTROENERGETYCZNYCH

Streszczenie. *W niniejszym artykule omówiono opracowanie, wdrożenie oraz weryfikację ilościową systemu diagnostycznego Spectrum, przeznaczonego do kompleksowego monitorowania i sterowania trybami pracy w sieciach dystrybucji energii elektrycznej. Metodologia badawcza łączy teoretyczne modelowanie przepływu mocy z zaawansowanym eksperymentalnym gromadzeniem danych. Z teoretycznego punktu widzenia tryby pracy w stanie ustalonym oblicza się przy użyciu zmodyfikowanej procedury iteracyjnej opartej na algorytmie Newtona, dostosowanej do warunków asymetrycznych i niesinusowych, z wykorzystaniem reprezentacji we współrzędnych fazowych. W ramach badania eksperymentalnie wprowadzono oparty na mikroprocesorze wskaźnik parametrów zużycia energii (ECPI). Uwzględniając ograniczenia tradycyjnych transformatorów elektromagnetycznych, w badaniu uzasadniono zastosowanie optycznych przetworników prądu i napięcia w celu zminimalizowania nieodłącznych błędów pomiarowych. W celu porównania możliwości metrologicznych systemu przeprowadzono analizę porównawczą z charakterystyką dostępnego na rynku analizatora jakości energii Fluke 1734. Ponadto praktyczną przydatność opracowanego wskaźnika ECPI oceniono na podstawie pomiarów uzyskanych w zakłóconych warunkach pracy. Wyniki ilościowe wskazują, że dostosowany algorytm obliczeniowy charakteryzuje się błędem obliczeniowym nieprzekraczającym 5%, natomiast badania laboratoryjne całego kanału pomiarowego potwierdziły błąd wewnętrzny nieprzekraczający 2,5%. Przedstawione poziomy dokładności potwierdzają praktyczną przydatność proponowanej struktury do analizy trybów pracy, oceny konfiguracji sieci oraz zarządzania przepływem mocy w nowoczesnych sieciach dystrybucyjnych.*

Słowa kluczowe: wskaźnik parametrów zużycia energii, jakość energii elektrycznej

Introduction

Reliable diagnostics of operating modes in distribution networks is crucial to ensuring stable, high-quality performance. Effective diagnostics is based on accurate theoretical calculations and experimental measurements of operating parameters. Theoretical calculations help solve a wide range of scientific and practical problems and facilitate the development of modern dynamic models of electrical-network operating modes. Experimental studies are used to verify or refine theoretical results. Furthermore, they provide insight into the real processes occurring in electrical distribution networks, which is essential for the operation of high-value power equipment.

The energy sector in Ukraine provides a relevant practical context for this study because it combines infrastructure aging, ongoing network modernization, renewable energy integration, and disrupted operating conditions. These factors underscore the need for reliable monitoring and control of distribution network operating modes.

Therefore, the creation and implementation of modern diagnostic systems for power-supply operating modes remains a pressing engineering task. Such systems can help optimize the management of electrical networks and power equipment, improving their efficiency and reliability.

Although the practical motivation includes the Ukrainian power sector, it is used here as a representative stress scenario rather than as the exclusive scope of applicability. The reported results are generalizable to distribution networks globally because the underlying problems aging assets, topology complexity, limited observability, asymmetry, non-sinusoidal loading, and the need for resilient diagnostic support under degraded or rapidly changing conditions are common across many systems. Accordingly, the paper's scientific contribution lies in the general calculation and measurement framework, whereas the local context primarily serves to illustrate relevance.

The sustainable progress of a nation is inextricably linked to the advancement of the energy sector [9]. Consequently, the expansion of the energy industry requires addressing various challenges, including integrating innovative technologies and advanced planning approaches [24], ensuring personnel qualifications, and prioritizing occupational safety and workplace security during operations. Accordingly, these tasks should be implemented in accordance with current technical and organizational requirements, including policy and standardization frameworks for technology deployment and established occupational safety practices in electricity distribution companies [11, 24].

The urgency of these issues becomes particularly acute under disturbed operating conditions, during sector transformation, and throughout the implementation of modern technologies [9, 24]. From a scientific perspective, the key priority is ensuring the reliability and stability of electrical networks [27, 31].

This work is licensed under a Creative Commons Attribution 4.0 International License.
Utwór dostępny jest na licencji Creative Commons Uznanie autorstwa 4.0 Międzynarodowe.

A promising solution to these challenges is the widespread adoption of high-capacity energy storage systems [14, 16, 30, 32].

The importance of these challenges necessitates focused research efforts, and processes in the power sector must be analysed within the spatial and temporal dimensions [22, 28]. The foundation of these advancements is experimental research and accurate measurements of electrical quantities, carried out in accordance with standardized power quality requirements and supported by modern measurement technologies [7, 19].

In engineering projects and scientific research, operating mode calculations of electrical networks play a crucial role, including the simulation of emergency and disturbed operating modes in systems with renewable energy sources [20]. These calculations are performed using advanced software solutions [5]. All these factors are essential for the effective management of power supply modes and the reliable operation of key energy equipment [10]. These issues have been extensively studied by both domestic and international researchers [1, 2, 12, 17].

1. Theoretical foundations and development of the calculation module

For analysing the operating modes of distribution electrical networks, the Spectrum information and control system was developed. Its functionality is based on multiparametric monitoring and control of the network state.

The state of the electrical distribution network depends on the ratio between the operating mode parameters (OMP) and the electrical network parameters (PEN) [22, 29]. The information and control system operates in real time, continuously analysing key power-quality indicators. The monitored operating mode parameters include fundamental power quality indicators, while the controlled parameters of the electrical network include active and reactive conductance (impedance) of longitudinal and transverse elements.

The Spectrum information and control system conducts research in three main areas: calculations, measurements, and the development of strategies for optimizing the management of electrical distribution network modes.

During the calculation process:

1. The parameters of individual electrical network elements are modelled.
2. Steady-state operating modes of the electrical network are calculated and analysed, taking into account energy losses.
3. Measures for optimizing the operating mode and state of the electrical network are developed.

Various calculation tools can be used for these computations, including standard software packages such as PowerFactory, COSMOS, MUSTANG, EUROSTAG, and PSS/E, as well as specialized software solutions such as "Regime" and "Maestro".

The calculation results provide a theoretical foundation for enhancing the reliability and efficiency of the electrical distribution network and its individual elements [8, 13]. The most effective operating mode calculations for distribution networks are performed using nodal equations:

$$\dot{U}_i^2 \dot{Y}_{ii} - U_i^* \sum_{j=1 j\neq i}^{k} \dot{U}_j \dot{Y}_{ij} + S_i^* = 0 \tag{1}$$

where $\dot{U}_i$, $\dot{U}_j$ denotes the complex voltage at nodes i and j, $\dot{Y}_{ii}$ denotes the self-admittance of node i, $\dot{Y}_{ij}$ denotes the mutual admittance between nodes i and j, S_i^* denotes the conjugate complex load power at node i, U_i^* denotes the conjugate complex voltage at node i.

The most commonly used approach for solving nonlinear equation systems involves various modifications of Newton's method. In general form, they can be expressed as follows:

$$W + \frac{dW}{dX} \cdot \Delta X = 0 \tag{2}$$

where W is the column vector of calculated values, X is the column vector of independent variables, $\frac{dW}{dX}$ denotes the derivative matrix (Jacobian matrix).

In this work, the use of Newton's method is understood not as the introduction of a fundamentally new universal iteration formula, but as an adaptation of the Newton-based solution procedure to the analysis of three-phase distribution networks under asymmetric and non-sinusoidal operating conditions. The distinguishing feature of the proposed approach is that the network model is represented in phase coordinates and the equations of network elements are organized in a unified block-matrix form. At each iteration, the nonlinear nodal balance equations are linearized using the Newton procedure, and the resulting linearized system is solved with account of its block structure and sparse interconnections. Such an organization of the computational process is more suitable for practical analysis of real distribution networks than a simplified single-phase equivalent representation.

The computational procedure applied in the present study can be summarized as follows:

1. The distribution network is represented in phase coordinates rather than by a simplified single-phase equivalent.
2. The equations of the network elements are organized in a unified block-matrix form.
3. Nonlinear nodal power-balance equations are formed for the operating mode under study.
4. At the current iteration, the nonlinear equations are linearized according to the Newton approach.
5. The obtained linearized system is solved taking into account the block structure and sparse connectivity of the network matrices.
6. The state variables are updated, and the iterative process is repeated until the prescribed mismatch tolerance is achieved.

For many years, specialists have faced the challenge that, in networks with asymmetric, non-uniform, and nonlinear loads, the calculated and measured reactive power values can differ significantly. This discrepancy is primarily due to the uncertainty in the definition of reactive power.

To gain a deeper understanding of this issue, let us examine its theoretical foundations in more detail. In the present study, DSTU EN 50160:2023 [7] is used primarily as a compliance reference for the national power-quality framework. The scientific argument, however, is based on general relationships of circuit theory, nodal power-balance equations, and measurement principles that are applicable to distribution networks independently of jurisdiction.

The energy exchange between a single-phase source and a nonlinear load is generally described by the instantaneous power function $p(t)$, which denotes the energy transfer processes:

$$p(t) = u(t) \cdot i(t) \tag{3}$$

where $u(t)$ and $i(t)$ denote the instantaneous values of voltage and current.

In nonlinear energy processes, the waveforms of current and voltage differ and are non-sinusoidal. By applying the Fourier series expansion, we obtain:

$$i(t) = \sum_{l=1}^{m} \sqrt{2} I_l \sin(l\omega t - \beta_l) \tag{4}$$

$$u(t) = \sum_{k=1}^{n} \sqrt{2} U_k \sin(k\omega t + \alpha_k) \tag{5}$$

where m denotes the set of current harmonics, and n denotes the set of voltage harmonics.

In electrical networks with non-sinusoidal current and voltage waveforms, the instantaneous power has only one unambiguous integral characteristic – the average (active) power:

$$P = \frac{1}{T}\int_0^T p(t)\,dt = \frac{1}{T}\int_0^T u(t)\cdot i(t)\,dt = \sum_{j=1}^{R} U_j I_j \cos\phi_j \tag{6}$$

The non-active components, required for transmitting the specified value of active power, collectively form the total power through the entire spectrum of current and voltage harmonics:

$$S = UI = \sqrt{\sum_{k=1}^{n} U_k^2} \cdot \sqrt{\sum_{l=1}^{m} I_l^2} \tag{7}$$

The universality of defining total power as the product of the effective values of current and voltage lies in the fact that these values are calculated based on their instantaneous values [4].

This approach enables the formulation of the concept of reactive power for both linear and nonlinear circuits:

$$Q = \sqrt{S^2 - P^2} \tag{8}$$

The main challenge lies in the fact that, in non-sinusoidal processes, there is no clear correspondence between total power and reactive power:

$$S^2 \neq P^2 + Q^2 \tag{9}$$

Therefore, using the Cauchy inequality, this discrepancy is defined as the sum of the squares of the mismatch components:

$$S^2 - P^2 = \sum_{k=1}^{\infty} c_k^2 \tag{10}$$

where k denotes the quadrature component of the mismatch or the non-active component of total power.

The development of reactive power theory has deep historical roots [6, 10]. Different interpretations of the non-active component of total power lead to various definitions of reactive power and energy [26].

Most experts believe that, for energy balance calculations in electrical networks, the two most appropriate methods are:

1. Measuring instantaneous values of current and voltage.
2. Calculating integral characteristics, such as active, reactive, and total energy.

Recently, the preferred approach has been to account for real energy processes by utilizing instantaneous current and voltage values.

Thus, power losses in electrical networks (including transmission lines and transformers) can be most accurately determined using formulas (6)–(12). It should be noted that formula (12) takes into account the influence of a "low-quality" consumer, i.e., a consumer with distorted and/or unbalanced current-voltage waveforms that deteriorate power quality and may affect metrologically accurate energy assessment [4]:

$$S = \sqrt{(U_A^2 + U_B^2 + U_C^2) \cdot (I_A^2 + I_B^2 + I_C^2 + I_0^2)} \tag{11}$$

$$S = \sqrt{(U_A^2 + U_B^2 + U_C^2 - U_0^2) \cdot (I_A^2 + I_B^2 + I_C^2 + I_0^2)} \tag{12}$$

where U_A, U_B, U_C, I_A, I_B, I_C are phase voltages and currents, U_0, I_0, are the neutral-bias voltage and the current through the neutral conductor, respectively.

The general structure of the electrical network under consideration is shown in Figure 1.

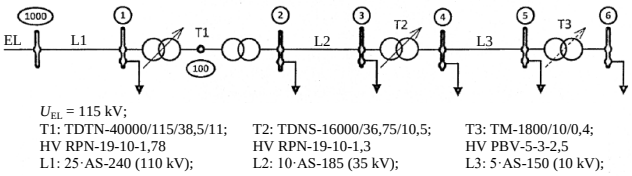

Fig. 1. General structure of the electrical network under study

2. Design and implementation of the measurement module based on the energy consumption parameter indicator

During measurements, the system performs data collection, accumulation, processing, visualization, and storage of information related to the operating parameters of the electrical network. Additionally, data from various automated systems such as SCADA, DCS, AMR/AMI, EMS, RTU, and others may be utilized.

Our research is primarily based on experimental studies conducted using the Spectrum information and control system, which largely confirmed the theoretical assumptions. The core component of this system is the Energy Consumption Parameter Indicator (ECPI).

Figure 2 shows the external appearance of the indicator.

Fig. 2. Energy Consumption Parameter Indicator (ECPI)

The Energy Consumption Parameter Indicator (ECPI) for three-phase AC circuits is designed for:

- monitoring the parameters of three-phase AC circuits.
- load monitoring.
- displaying control results in digital format.
- storing control results in non-volatile memory.
- transmitting control results to a personal computer (PC) or another storage system.

The ECPI can be used either as a standalone measurement device or as part of various electrical installations.

The microprocessor-based device performs sampling and conversion of incoming analogue values, calculating the monitored parameters in digital form.

The effective values of phase voltages and currents are determined based on discrete responses of their instantaneous values according to the following expressions:

$$U_d = \sqrt{\frac{1}{T}\int_0^T u^2(t)dt} \tag{13}$$

$$I_d = \sqrt{\frac{1}{T}\int_0^T i^2(t)dt} \tag{14}$$

This ensures accurate measurement of voltages and currents of arbitrary waveforms without the need for harmonic correction factors.

The line voltage is calculated based on phase voltage values:

$$U_{AB} = \sqrt{U_A^2 + U_B^2 + U_A U_B} \tag{15}$$

$$U_{BC} = \sqrt{U_B^2 + U_C^2 + U_B U_C} \tag{16}$$

$$U_{AC} = \sqrt{U_A^2 + U_C^2 + U_A U_C} \tag{17}$$

The active and reactive power values in each phase are computed from measured discrete instantaneous voltage and current values:

$$P_a = \frac{1}{T}\int_0^T u(t)i(t)dt \tag{18}$$

$$P_r = \sqrt{(U_d I_d)^2 - P_a^2} \tag{19}$$

The main component responsible for measurement, parameter calculation, data storage, and transmission is the central processor (STM32). The STM32 is built on the Cortex-M3 core, which offers numerous advantages, with universality being its primary strength.

One of the key benefits of the STM32 series is its low-power stop and standby modes, where power consumption drops to 1.6 μA. In stop mode, all clock sources are halted, but RAM retention is maintained, allowing the transition to active mode in just a few microseconds. In standby mode, all components are turned off except for the real-time clock (RTC), and waking up from this mode takes several tens of microseconds.

The high-performance STM32 processor enables the execution of all tasks faster, allowing the system to return to sleep mode quickly. As a result, the average power consumption is significantly lower compared to 8-bit or 16-bit microcontrollers.

During measurements, special attention is paid to error minimization. The improvement of the Energy Consumption Parameter Indicator (ECPI) is also focused on reducing measurement uncertainty. A significant contribution to the overall error originates from electromagnetic current and voltage transformers. Therefore, the implementation of optical current and voltage transformers (sensors) is a promising approach to improving accuracy. Let us now consider the connection of the ECPI to the electrical network in more detail.

The metrological characteristics of the ECPI-based measurement channel were assessed from two complementary perspectives. First, the total error was analysed by taking into account the accuracy of the main elements of the measurement path, including current transformers, voltage transformers, signal-conversion stages, and digital processing in the STM32-based device. Second, the reported upper-bound intrinsic error of 2.5% is not an arbitrary estimate; rather, it is based on prior laboratory verification of the developed measurement channel performed during prototype testing.

In the present paper, this value is used as a documented integral characteristic of the prototype measurement channel. Since the purpose of this article is focused primarily on the architecture of the diagnostic system and its use in operating-mode analysis, a full metrological report is not reproduced here. At the same time, the stated error level reflects the combined influence of the principal uncertainty contributors within the measurement system, primarily the ratio and phase errors of the current and voltage transformers, as well as the characteristics of signal acquisition and digital processing.

Under operating conditions, the ECPI is typically connected to the electrical network via current transformers (CTs) with a secondary current of 5 A and voltage transformers (VTs) with a secondary voltage of 100 V.

When connecting the device, it is crucial to observe polarity at both the primary winding (L1 and L2) and the secondary winding of the current transformer. Similarly, the polarity of the voltage transformer windings must also be carefully maintained.

A wiring diagram for connecting the ECPI to a three-phase three-wire or four-wire network using three current transformers and three voltage transformers is presented in Figure 3.

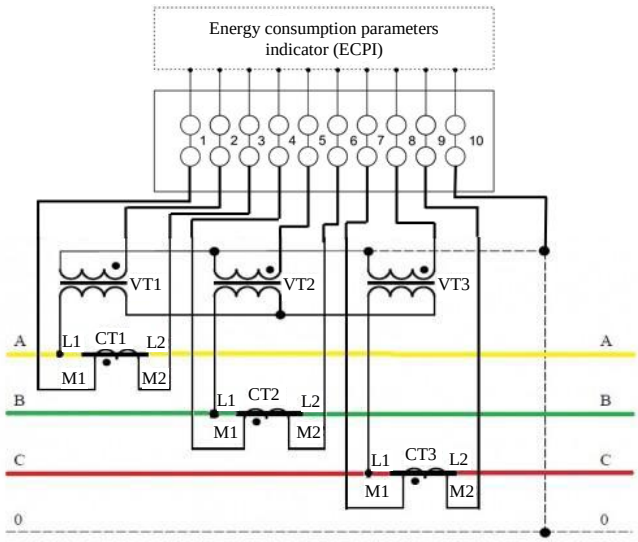

Fig. 3. Wiring diagram for connecting the ECPI to a three-phase three-wire or four-wire network using three current transformers and three voltage transformers (VT1–VT3, voltage transformers; CT1–CT3, current transformers; L1, L2, M1, M2, terminal designations)

The dashed lines in the diagram indicate connections that may be optional.

For safety purposes, the common point of the secondary windings of the current and voltage transformers must be grounded.

A wiring diagram for connecting the Energy Consumption Parameter Indicator (ECPI) to a three-phase, three-wire network using two current transformers and three voltage transformers is presented in Figure 4.

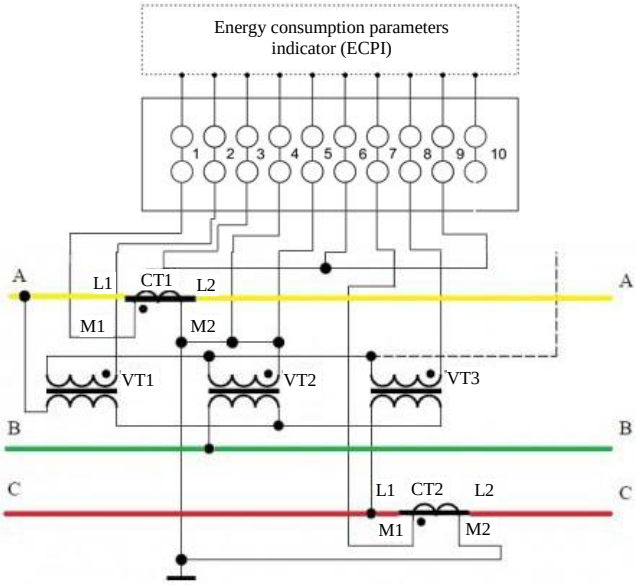

Fig. 4. Wiring diagram for connecting the ECPI to a three-phase three-wire network using two current transformers and three voltage transformers (VT1–VT3, voltage transformers; CT1, CT2, current transformers; L1, L2, M1, M2, terminal designations)

The wiring diagram for connecting the Energy Consumption Parameter Indicator (ECPI) to a three-phase, three-wire network using two current transformers and two voltage transformers is presented in Figure 5.

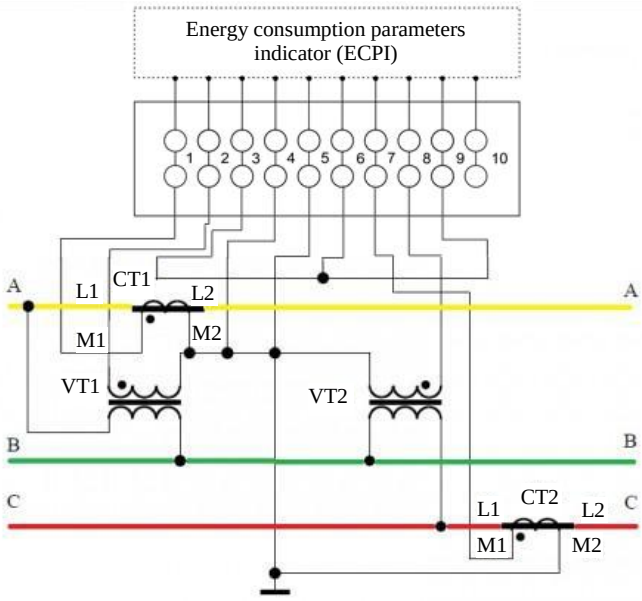

Fig. 5. Wiring diagram for connecting the ECPI to a three-phase three-wire network using two current transformers and two voltage transformers (VT1, VT2, voltage transformers; CT1, CT2, current transformers; L1, L2, M1, M2, terminal designations)

Despite the widespread practical use of electromagnetic measuring transformers, it is important to note that they introduce significant measurement errors. Therefore, the use of optical current and voltage transformers is undoubtedly a promising alternative. However, despite their clear advantages, these transformers are still not widely adopted and remain relatively expensive. This limitation should be addressed in future work.

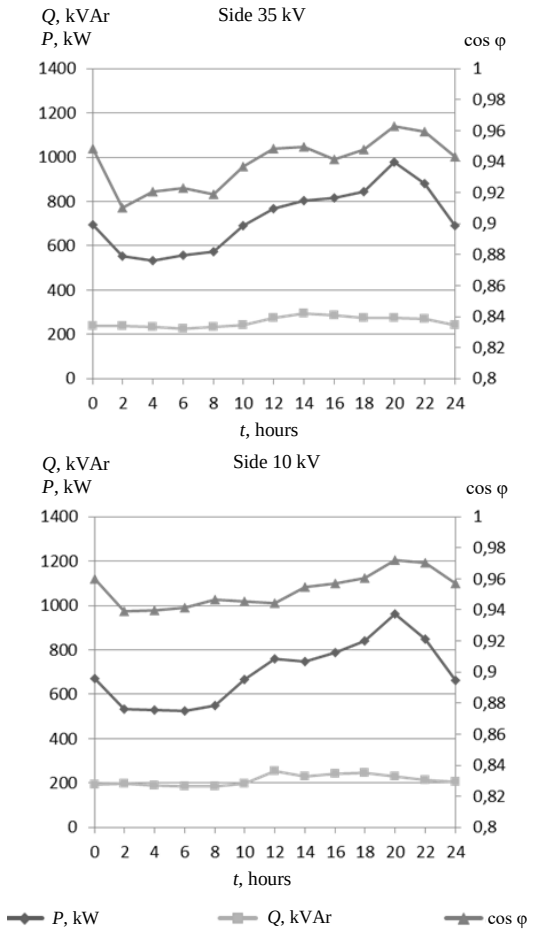

Fig. 6. Simultaneous measurements of active and reactive power on both sides of the 35/10 kV transformer

Figure 6 shows the results of simultaneous measurement of active and reactive power on both sides of transformer T2 rated 35/10 kV (Figure 1).

Table 1 presents the characteristics of the Spectrum power-quality recorder developed by the authors and of a comparable commercial analogue, the Fluke 1734 power-quality recorder manufactured in the USA.

Table 1. Comparison of the three-phase power-quality recorder Fluke 1734 (USA) and the measurement system Spectrum (Ukraine)

Parameters	Fluke 1734	Spectrum
Line voltage, V	up to 1000	up to 600
Phase currents, A	up to 1500	up to 1000
Frequency, Hz	42.5…69	42.5…69
Intrinsic error of total energy, %	1.7	2.5
Cost, EUR	3000	1000

Thus, the study combines theoretical operating-mode calculations with experimental measurement support. Table 1 presents a market-oriented comparison between the Spectrum recorder considered in this study and a commercially available analogue. At the same time, the intrinsic error value reported for the developed system should be interpreted not merely as a catalogue characteristic, but as an integral estimate of the ECPI-based measurement channel obtained from prior laboratory verification and supported by the accuracy characteristics of the current and voltage transformers used in the measurement circuit.

Accordingly, the stated 2.5% upper-bound error refers to the complete measurement path for total-energy assessment rather than to an isolated electronic module alone. This is important because, in practical three-phase networks, the overall accuracy is determined by the combined behaviour of the measurement transformers, the signal-conversion stages, and the microprocessor-based processing unit.

In real operating conditions, the studied modes are nonlinear, asymmetric, and non-sinusoidal. Therefore, the applied theoretical framework and calculation programs must be as reliable, accurate, and efficient as possible. Mathematical modelling is carried out using nodal power-balance equations. These equations are nonlinear and are therefore solved by a Newton-based iterative method. The applied computational procedure is adapted to the phase-coordinate representation of the network and to a block-structured form of the equations, which makes it more suitable for the analysis of asymmetric operating modes in distribution systems. The calculation results are the magnitudes and phase angles of voltage vectors at network nodes, as well as power flows and losses throughout the network. The calculation error does not exceed 5%. Calculations are performed using the software packages "Mode" and "Maestro".

Further work may focus on:

- improvement of measurement algorithms, including the use of optical measurement transformers, to improve measurement accuracy;
- improvement of measurement devices through the use of an advanced component base and modern measurement technologies;
- improvement of device operation, including through the use of modern technologies for programming the STM32 microprocessor;
- improvement of calculation algorithms;
- reduction of the calculation error to 1% through the use of improved mathematical models and computational methods for modern power-system operating conditions, including the integration of alternative energy sources.

The proposed framework may also be relevant for:

- solving the problems of optimizing power grid modes in modern conditions of introducing alternative energy sources;
- improving voltage regulation means (development of a new tap-changer device for power transformers);
- determining the static stability reserves of power grids and systems in modern conditions.

3. Control strategies for optimizing operating modes in electrical distribution networks

Based on the theoretical and experimental studies discussed above, it is possible to develop recommendations for the management of electrical-network operating modes. These include:

- determining the optimal configuration of power equipment and electrical installations;
- optimizing the structure of the electrical network;
- managing power consumption;
- optimal control of network operating modes based on the *n*, *u*, and *Q* parameters.

The control module can be built on existing automated systems. Specially designed Energy Consumption Parameter Indicators (ECPI) [15] or various electricity-flow monitoring devices, including modern electricity meters, can be used as primary information sources.

The efficiency of the information and control system strongly depends on the integration of modern information technologies, which ensure its operation and communication between its individual modules.

Over the past decades, the development of measurement technologies in power engineering has been closely linked to the advancement of digital information technologies. Notably, the accuracy of low-voltage measuring devices has been significantly higher compared to high-voltage electromagnetic measuring transformers.

Recently, foreign manufacturers [18] have introduced commercially available high-voltage measurement devices of a fundamentally new type, namely electronic (optical) current and voltage transformers [25]. Their advantages over conventional electromagnetic transformers are evident, particularly in terms of improved measurement accuracy and reduced uncertainty under distorted operating conditions [3].

The working principle of such current transformers (CTs) and voltage transformers (VTs) is based on modifying the polarization state of a light beam:

- In current transformers, this occurs due to the influence of a magnetic field.
- In voltage transformers, it is caused by the effect of an electric field.

As a result, the measured current and voltage values are directly proportional to the instantaneous value of the electrical quantity being measured, which constitutes their principal advantage over conventional electromagnetic transformers [21, 23, 25]. Moreover, most measurement functions can now be effectively performed by a personal computer equipped with specialized software.

When using optical CTs and VTs, the structure of the measuring system (MS) can be represented as shown in Figure 7.

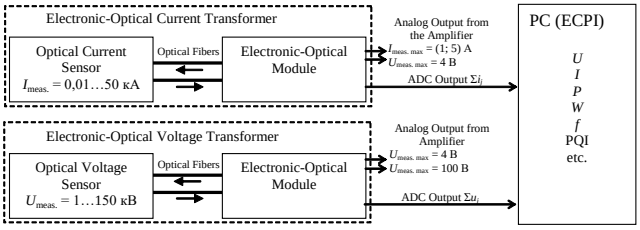

Fig. 7. Structure of the measurement system (MS)

All primary power engineering parameters are computed on a personal computer using arrays of instantaneous current and voltage values, which ensures minimal systematic measurement errors. This highlights the broad potential for implementing such measurement technologies.

4. Conclusions

The paper examines the current state of development of the Spectrum information and control system. Its operation is based on calculations and measurements of key operating-mode parameters. Although the study is motivated by a representative Ukrainian stress scenario, the methodological results are applicable to distribution networks globally because they address general problems of observability, power-quality assessment, asymmetric operating modes, and resilient diagnostics. The system development must align with modern trends in distribution networks, including the integration of alternative energy sources, the implementation of advanced information systems, and the development of localized electrical networks.

The paper presents a methodology for calculating steady-state operating modes of electrical networks, with primary emphasis on reactive-power computation and interpretation. Regarding the methodology for measuring fundamental electrical parameters, the main emphasis is placed on the measurement circuit. The reported intrinsic error of up to 2.5% for the developed ECPI-based measurement circuit is based on prior laboratory verification of the prototype and on the accuracy characteristics of the principal elements of the measurement path, including current and voltage transformers. Therefore, this value is treated as an integral characteristic of the complete measurement channel.

A promising solution for reducing overall measurement errors is the implementation of optical current and voltage transformers. The article outlines the methodology for introducing these technologies. The calculation and measurement results form the basis for effective management of electrical distribution-network operating modes, particularly in dispatch control operations. These aspects contribute to enhancing the reliability, quality, and energy efficiency of power-supply systems.

The developed measurement system was also used in an energy audit of an educational institution to identify inefficient electricity use and to support the development of practical retrofit recommendations. Based on the diagnostic results, several energy-saving measures were proposed, including the replacement of lighting with more efficient fixtures, modernization of laboratory equipment, and upgrading of wiring and switching equipment. Within the scope of the present paper, these measures are presented as engineering recommendations supported by diagnostic monitoring rather than as a formally verified quantitative estimate of annual cost savings, because no dedicated post-retrofit measurement-and-verification stage was carried out.

References

[1] Chamba, A., Barrera-Singaña, C., & Arcos, H. (2023). Optimal Reactive Power Dispatch in Electric Transmission Systems Using the Multi-Agent Model with Volt-VAR Control. *Energies*, *16*(13), 5004. https://doi.org/10.3390/en16135004

[2] Chen, G., Zhang, A., & Xiao, Y. (2020). Optimization of Minimum Active Network Loss in Radial Distribution Network Based on Improved Big Bang-Big Crunch Algorithm. *2020 Chinese Automation Congress (CAC)*, 727–733. https://doi.org/10.1109/CAC51589.2020.9327149

[3] Costa, M. M., Martinez, M. A. G., & Costa, J. C. W. A. (2024). Review of Uncertainty Sources in Optical Current Sensors Used in Power Systems. *Energies*, *17*(16), 4162. https://doi.org/10.3390/en17164162

[4] Cultrera, A., Germito, G., Serazio, D., Galliana, F., Trinchera, B., Aprile, G., Chirulli, M., & Callegaro, L. (2024). Active Energy Meters Tested in Realistic Non-Sinusoidal Conditions Recorded on the Field and Reproduced in Laboratory. *Energies*, *17*(6), 1403. https://doi.org/10.3390/en17061403

[5] DIgSILENT GmbH. (2026). *PowerFactory. User Manual*. https://www.digsilent.de/en/powerfactory-download.html

[6] Ding, Y., Mao, M., & Chang, L. (2021). Conservative power theory and its applications in modern smart grid: Review and prospect. *Applied Energy*, *303*, 117617. https://doi.org/10.1016/j.apenergy.2021.117617

[7] DSTU EN 50160:2023 (EN 50160:2022, IDT). (2023). *Voltage characteristics of electricity supplied by public electricity networks*. Ukrainian Scientific-Research and Training Centre for Standardization, Certification and Quality (UkrNDNC).

[8] El-Fergany, A. A. (2025). Reviews on Load Flow Methods in Electric Distribution Networks. *Archives of Computational Methods in Engineering*, *32*(3), 1619–1633. https://doi.org/10.1007/s11831-024-10191-7

[9] *Energy strategy of Ukraine for the period up to 2035: Security, Energy Efficiency, Competitiveness* (No. 605). (2017). Order of the Cabinet of Ministers of Ukraine. http://zakon.rada.gov.ua/laws/show/605-2017-%D1%80

[10] Gopalapillai, A., & Fernandez, F. M. (2023). A review on reactive power measurement in harmonic environment. *International Journal of Power and Energy Conversion*, *14*(4), 311–331. https://doi.org/10.1504/IJPEC.2023.135475

[11] Janackovic, G., Stojiljkovic, E., & Grozdanovic, M. (2020). Selection of key indicators for the improvement of occupational safety system in electricity distribution companies. *Safety Science*, *125*, 103654. https://doi.org/10.1016/j.ssci.2017.07.009

[12] Ji, Y., Chen, X., Wang, T., He, P., Jin, N., Li, C., & Tao, Y. (2022). Dynamic reactive power optimization of distribution network with distributed generation based on fuzzy time clustering. *IET Generation, Transmission & Distribution*, *16*(7), 1349–1363. https://doi.org/10.1049/gtd2.12370

[13] Khasawneh, A., Qawaqzeh, M., Kuchanskyy, V., Rubanenko, O., Miroshnyk, O., Shchur, T., & Drechny, M. (2021). Optimal Determination Method of the Transposition Steps of An Extra-High Voltage Power Transmission Line. *Energies*, *14*(20), 6791. https://doi.org/10.3390/en14206791

[14] Kulyk, M. M., Dromin, I. V., & Zhurovets, O. V. (2018). Feasibility of using large battery energy storage systems for frequency stabilization in integrated power systems with powerful solar power plants. *Vidnovluvana Energetika*, (3), 6–14. http://jnas.nbuv.gov.ua/article/UJRN-0000982644

[15] Li, S., & Li, J. (2017). Condition monitoring and diagnosis of power equipment: Review and prospective. *High Voltage*, *2*(2), 82–91. https://doi.org/10.1049/hve.2017.0026

[16] Miroshnyk, O., Moroz, O., Shchur, T., Chepizhnyi, A., Qawaqzeh, M., & Kocira, S. (2023). Investigation of Smart Grid Operation Modes with Electrical Energy Storage System. *Energies*, *16*(6), 2638. https://doi.org/10.3390/en16062638

[17] Ning, Z., Wang, C., Deng, W., Zhu, X. J., & Jia, L. (2019). Reactive Power Optimization Algorithm of Active Distribution Network Based on Improved Quantum Particle Swarm Optimization. *2019 IEEE PES Asia-Pacific Power and Energy Engineering Conference (APPEEC)*, 1–4. https://doi.org/10.1109/APPEEC45492.2019.8994530

[18] NR Electric Co., Ltd. (2026). *Digital Substation – Products*. https://www.nrec.com/en/index.php/product/productList/6.html

[19] Probst, F. L., Da Luz, M. V. F., & Tenbohlen, S. (2023). Modeling of a capacitive voltage transformer for evaluation of transient response in conformity with the IEC 61869-5 Standard. *Electric Power Systems Research*, *223*, 109591. https://doi.org/10.1016/j.epsr.2023.109591

[20] Qawaqzeh, M. Z., Miroshnyk, O., Shchur, T., Kasner, R., Idzikowski, A., Kruszelnicka, W., Tomporowski, A., Bałdowska-Witos, P., Flizikowski, J., Zawada, M., & Doerffer, K. (2021). Research of Emergency Modes of Wind Power Plants Using Computer Simulation. *Energies*, *14*(16), 4780. https://doi.org/10.3390/en14164780

[21] Quispe-Valencia, L. M., Higuti, R. T., Teixeira, M. C. M., & Kitano, C. (2025). New Optical Voltage Sensor Based on Closed-Loop Pockels Cell and Sliding Mode Observer: Theory and Experiments. *Sensors*, *25*(17), 5319. https://doi.org/10.3390/s25175319

[22] Radhoush, S., Bahramipanah, M., Nehrir, H., & Shahooei, Z. (2022). A Review on State Estimation Techniques in Active Distribution Networks: Existing Practices and Their Challenges. *Sustainability*, *14*(5), 2520. https://doi.org/10.3390/su14052520

[23] Rubanenko, O., Belik, M., & Timr, J. (2024). Implementing European Experiences of Energy Community Strategy Based on High Utilization of Renewable Energy Sources to Distributed Power Grids in Ukrainian Conditions. *2024 24th International Scientific Conference on Electric Power Engineering (EPE)*, 1–6. https://doi.org/10.1109/EPE61521.2024.10559526

[24] Saldaña-González, A. E., Aragüés-Peñalba, M., Gadelha, V., & Sumper, A. (2025). Review of Active Distribution Network Planning: Elements in Optimization Models and Generative AI Applications. *Energies*, *19*(1), 116. https://doi.org/10.3390/en19010116

[25] Silva, A. D. A., Floridia, C., & Rosolem, J. B. (2021). Study of a Current and Voltage Polarization Sensor Network. *Sensors*, *21*(13), 4528. https://doi.org/10.3390/s21134528

[26] Tenti, P., Paredes, H. K. M., & Mattavelli, P. (2011). Conservative Power Theory, a Framework to Approach Control and Accountability Issues in Smart Microgrids. *IEEE Transactions on Power Electronics*, *26*(3), 664–673. https://doi.org/10.1109/TPEL.2010.2093153

[27] Tugay, Yu. I., Demov, O. D., Nikishyn, D. A., & Pivniuk, Yu. Yu. (2018). The decomposition of electrical networks for reactive power optimization. *Proceedings of the Institute of Electrodynamics of the National Academy of Sciences of Ukraine*, (50), 011. https://prc.ied.org.ua/index.php/proceedings/article/view/190

[28] Tugay, Yu., Nikishin, D., & Guy, A. (2018). The statistical model for analysis of electrical supply systems reliability. *Bulletin of Kharkiv National Technical University of Agriculture Named after Petro Vasylenko*, (195), 7–8. https://irbis-nbuv.gov.ua/cgi-bin/opac/search.exe?C21COM=2&I21DBN=UJRN&IMAGE_FILE_DOWNLOAD=1&Image_file_name=PDF%2FVkhdtusg_2018_195_4.pdf&P21DBN=UJRN

[29] Vijaychandra, J., Prasad, B. R. V., Darapureddi, V. K., Rao, B. V., & Knypiński, Ł. (2023). A Review of Distribution System State Estimation Methods and Their Applications in Power Systems. *Electronics*, *12*(3), 603. https://doi.org/10.3390/electronics12030603

[30] Xu, K., Guo, Y., Lei, G., & Zhu, J. (2023). A Review of Flywheel Energy Storage System Technologies. *Energies*, *16*(18), 6462. https://doi.org/10.3390/en16186462

[31] Zhang, X., Yang, H., Zhou, G., Zhao, Y., & Guo, D. (2023). Steady-state voltage stability assessment of new energy power systems with multi-quadrant power modes. *Energy Reports*, *9*, 3851–3860. https://doi.org/10.1016/j.egyr.2023.02.093

[32] Zhao, C., Andersen, P. B., Træholt, C., & Hashemi, S. (2023). Grid-connected battery energy storage system: A review on application and integration. *Renewable and Sustainable Energy Reviews*, *182*, 113400. https://doi.org/10.1016/j.rser.2023.113400

Ph.D. Eng. Ihor Khomenko
e-mail: igor.v.khomenko@gmail.com

Graduated from the National Technical University "Kharkiv Polytechnic Institute" (NTU "KhPI") in 1984 with a degree in Electrical Engineering. In 1990, he received a Ph.D. in Technical Sciences in the field of Electrical Machines. He works at NTU "KhPI" at the Department of Electric Power Transmission. His research interests include: operation modes and equipment of electric power networks, and electromagnetic field theory.

https://orcid.org/0009-0004-5627-1974

Ph.D. Eng. Ruslan Lozhkin
e-mail: Ruslan.Lozhkin@khpi.edu.ua

Graduated from the National Technical University "Kharkiv Polytechnic Institute" (NTU "KhPI") in 2001 with a degree in "Electrical Engineer-Researcher". In 2018, he received a Ph.D. in electrical engineering with a degree in "Powerful Electric and Magnetic Fields Engineering". He works at NTU "KhPI" at the Department of Automation and Cybersecurity of Energy Systems. His research interests include: automation and energy.

https://orcid.org/0000-0002-5049-514X

M.Sc. Eng. Andrii Shkrebela
e-mail: andrii.shkrebela@ieee.khpi.edu.ua

Graduated from NTU "KhPI" in 2018 with a master's degree in electrical energetics, electrical engineering and electromechanics (educational program: electrical systems and networks). Since 2024, he has been a Ph.D. student at the Department of Electric Power Transmission. His research interests include optimization of active load balancing in electric distribution systems and intelligent analysis of electric power network reliability.

https://orcid.org/0009-0007-9321-3361

D.Sc. Eng. Oleksandr Miroshnyk
e-mail: omiroshnyk@btu.kharkiv.ua

Graduated from Kharkiv State Technical University of Agriculture, Kharkiv, Ukraine, in 2004, and was qualified as an electrical engineer. He received his Ph.D. in electric engineering (power stations, systems and networks) from the National Technical University "Kharkiv Politechnic Institute", Ukraine, in 2009 and Doctor of Technical Sciences degree in 2016.
His research interests include: smart grid, electric distribution systems and renewable energy.

https://orcid.org/0000-0002-6144-7573

Ph.D. Eng. Anatolii Sereda
e-mail: ais66@btu.kharkiv.ua

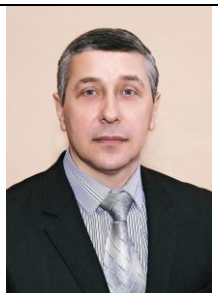

Graduated from Kharkiv State Technical University of Agriculture, Kharkiv, Ukraine, in 1996 and was qualified as an electrical engineer. He received his Ph.D. in electric engineering from the Kharkiv State Technical University of Agriculture, Ukraine, in 2007.
His research interests include: smart grid, electric distribution systems and renewable energy.

https://orcid.org/0000-0002-6144-7573

Ph.D. Eng. Taras Shchur
e-mail: shchurtg@gmail.com

Graduated from Kharkiv State Technical University of Agriculture in 2004, and was qualified as mechanical engineer. He received his Ph.D. in mechanical engineering (Machines and means of mechanization of agricultural production) from the Kharkiv State Technical University of Agriculture, in 2009.
His research interests include: smart grid and renewable energy.

https://orcid.org/0000-0003-0205-032X

Ph.D. Mariana Bohach
e-mail: bogachmm@gmail.com

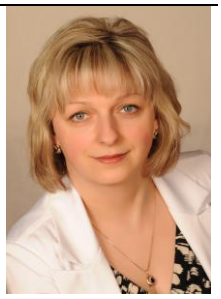

Graduated from Ivan Franko National University of Lviv, Lviv, Ukraine, in 1997 and was qualified as a mathematics teacher. Graduated from Lviv National Agrarian University, Lviv, Ukraine, in 2001 and was qualified in accounting and auditing. She received her Ph.D. in economics (economics and enterprise management) from the Lviv National Agrarian University, in 2010. Her research interests are related to research of mathematical methods and project management models.

https://orcid.org/0000-0002-2710-4155